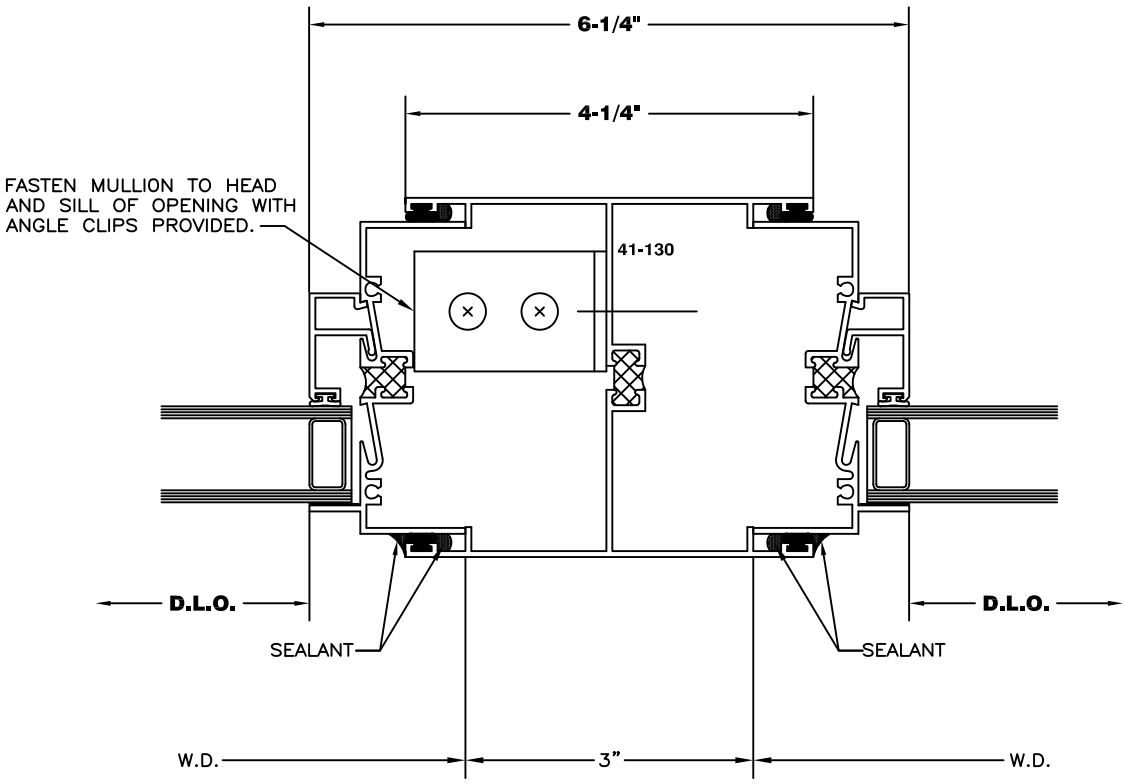

Copyright © 2005 Peerless Products Inc.
2403 S. Main Street · PO Box 431 · Fort Scott, Kansas 66701 · 1-866-420-4000
http://www.peerlessproducts.com
Note: PDF Files & Letter Size Paper = Half Scale
AutoCAD Drawing File = Full Scale

Updated: 02/04/2009

Section: Installation Details
Page #: